Schedule of Materials: Drop-Leaf Table

No.	Item	Dimensions T W L	Material	Notes
1	Table top	3/4" x 23" x 39"	Mahogany	
2	Leaves	3/4" x 15 3/4" x 39"	Mahogany	
4	Legs	2 1/4" x 2 1/4" x 28"	Mahogany	
2	Short aprons	3/4" x 4 1/4" x 20 1/8"	Mahogany	1" TBE; 1/4" offset
2	Long aprons	3/4" x 4 1/4" x 34 3/4"	Mahogany	1" TBE; 1 1/4" offset
4	Leaf supports	3/4" x 3 1/4" x 18"*	Mahogany	
2	Triangles	3/4" x 3 1/4" x 6 1/2"	Mahogany	

TBE= Tenon, both ends; * cut to fit
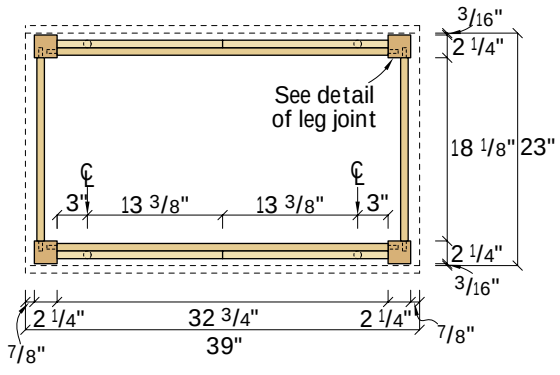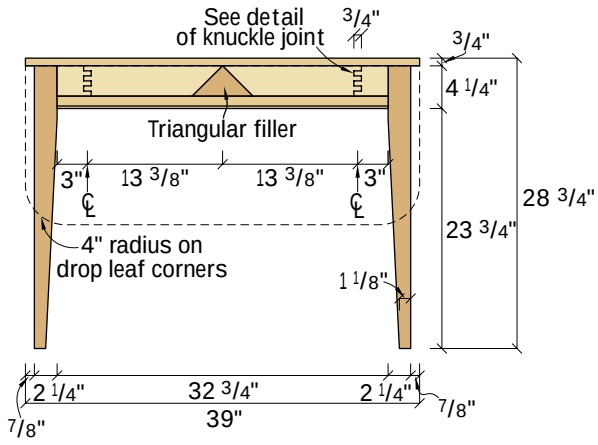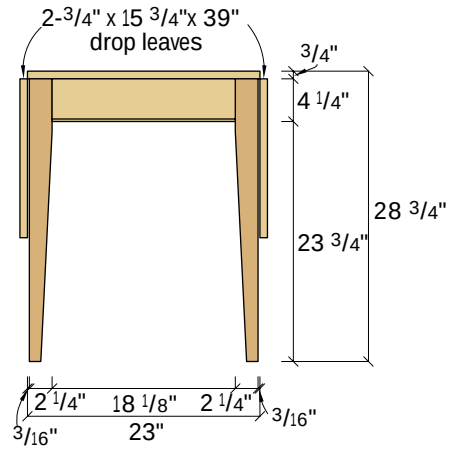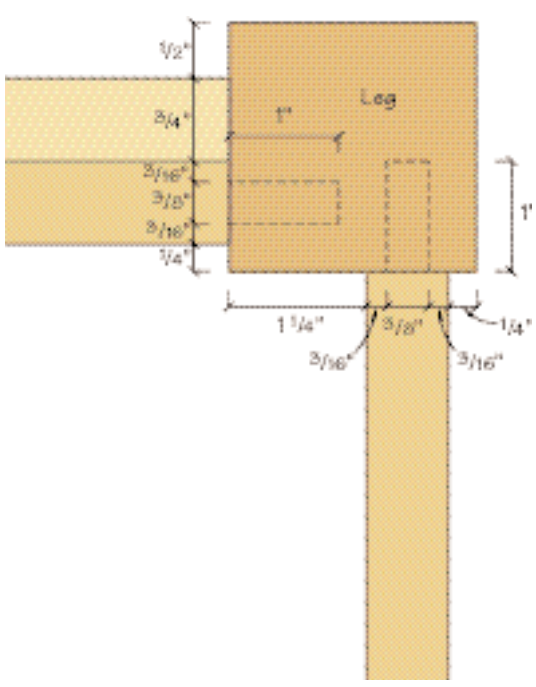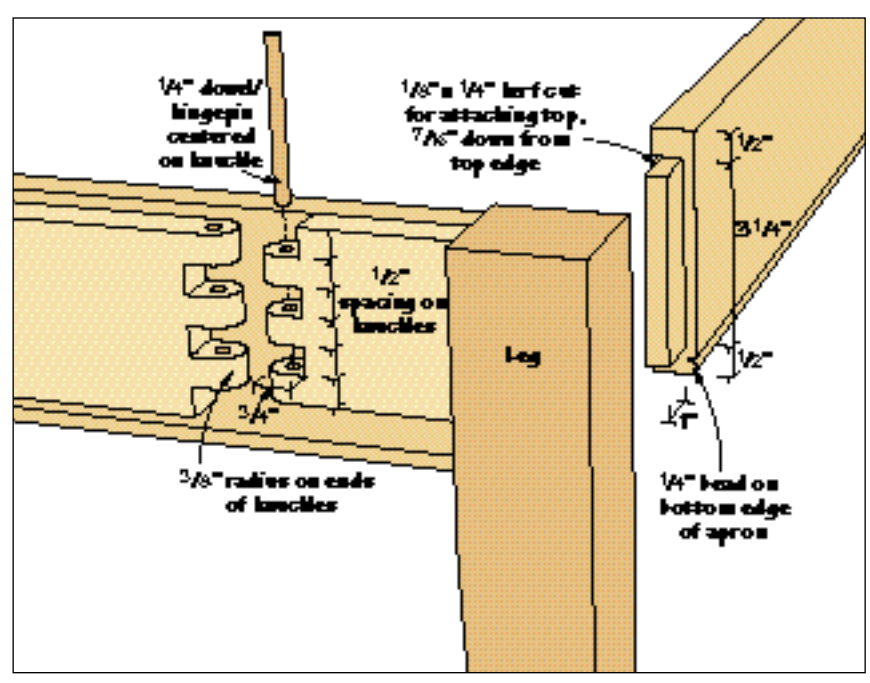
Supplies
4 Hinges for drop-leaves; Rockler part number 29249; $4.29 for 2 hinges
6 Tabletop fasteners; Rockler part number 34215; $1.99 for 8 fasteners
Rockler can be reached at www.rockler.com or 800-279-4441